BMW F 800 GS 2024-->

OVAL

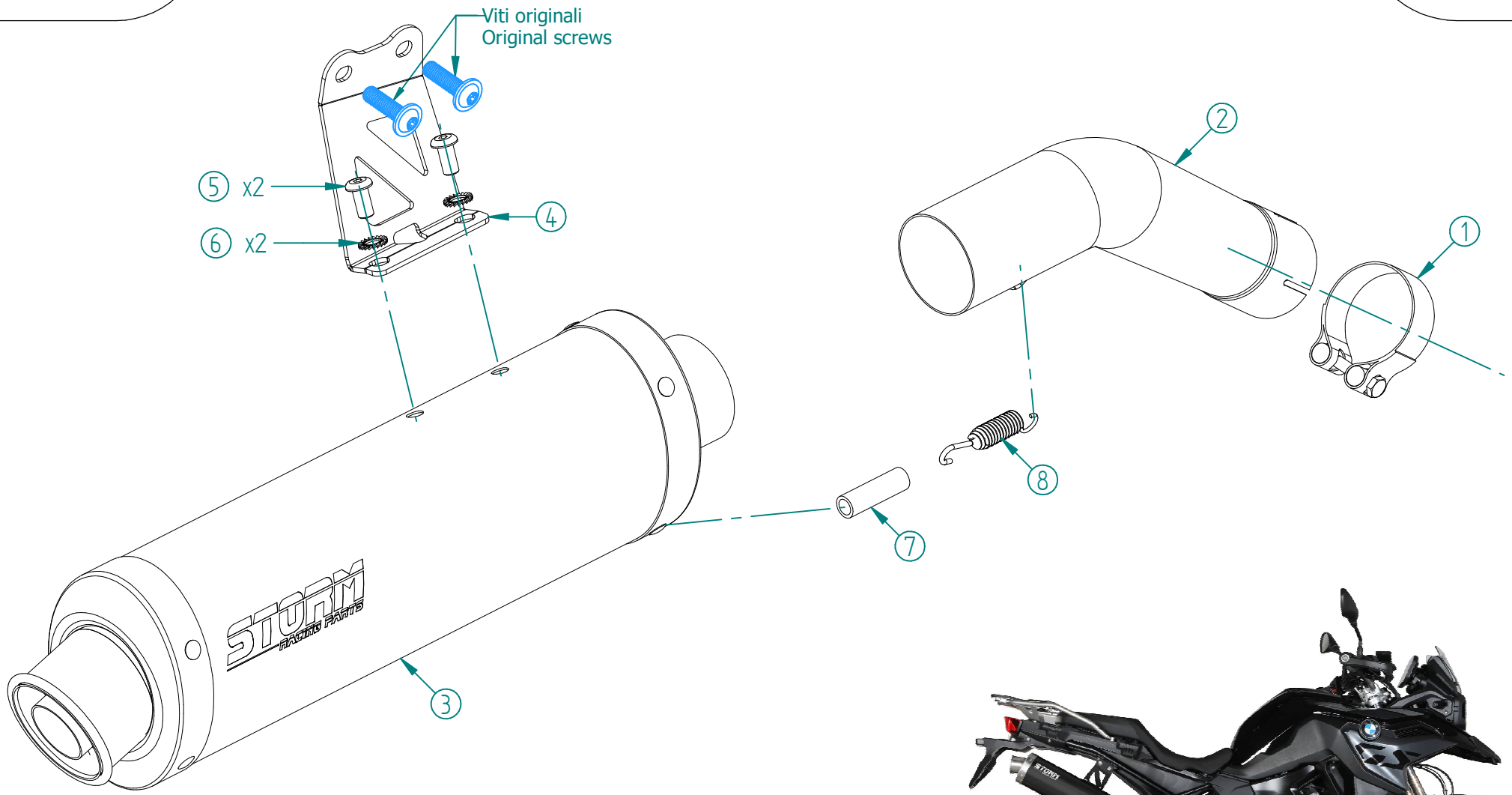

#	DESCRIPTION	PART NUMBER	QTY
1	Fascetta Ø 52/55 mm / Pipe clamp Ø 52/55 mm	50.FA.008.1	1
2	Tubo di raccordo / Link pipe	9773B044S3	1
3	Silenziatore / Muffler - dB killer 50.DK.021.0	OVAL 360	1
4	Staffa / Bracket	50.SS.1561.0	1
5	Vite M8 x 16 / Screw M8 x 16	50.73.098.1	2
6	Rondella di sicurezza / Safety washer	50.73.604.1	2
7	Tubo in gomma per molla / Rubber pipe for spring	50.73.049.0	1
8	Molla corta / Short Spring	50.73.123.1	1

APPLICAZIONI / APPLICATIONS			
CODICE / CODE	SILENZIATORE / MUFFLER	TUBO / PIPE	FASCETTA / CLAMP
74.B.044.LX1B	STEEL BLACK	INOX / ST. STEEL	///